Plugs: screwless / with screw terminals

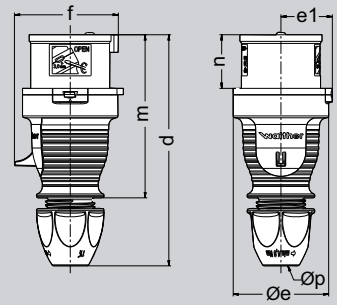

Amp.	16	16	32	32	32
Poles	4	5	3	4	5
d	150-161	150-161	173-185	173-185	174-183
Øe	65	65	72	72	72
e1	35	35	38,5	38,5	38,5
f	63	71	75	75	83
m	111	111	128	128	128
n	37	37	45,5	45,5	45,5
Øp	7,5 - 18,5	7,5-18,5	10 - 22,5	10 - 22,5	10 -22,5

Screwless plugs, with insulation dis-place-ment connection,
with exterior cable gland,
IP 44 ⚠

Conductor cross sections:
16 A: 1 - 2,5 mm² / 32 A: 2,5 - 6 mm²
Cable diameters:
16 A: 7,5 - 18,5 mm / 32 A: 10 - 22,5 mm

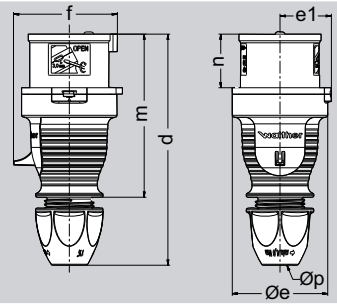

Amp.	16	16	32	32	32
Poles	4	5	3	4	5
d	150-161	150-161	173-185	173-185	174-183
Øe	65	65	72	72	72
e1	35	35	38,5	38,5	38,5
f	63	71	75	75	83
m	111	111	128	128	128
n	37	37	45,5	45,5	45,5
Øp	7,5 - 18,5	7,5-18,5	10 - 22,5	10 - 22,5	10 -22,5

Plugs, screw terminal connection,
with exterior cable gland,
IP 44 ⚠

Conductor cross sections:
16 A: 1 - 2,5 mm² / 32 A: 2,5 - 6 mm²
Cable diameters:
16 A: 7,5 - 18,5 mm / 32 A: 10 - 22,5 mm

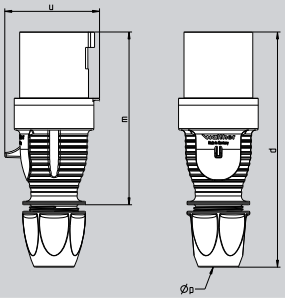

Amp.	63		
Poles	3	4	5
d	246	246	246
u	95	95	95
m	174	174	174
Øp	14-33	14-33	14-33

Plugs, screw terminal connection,
with exterior cable gland,
IP 44 ⚠

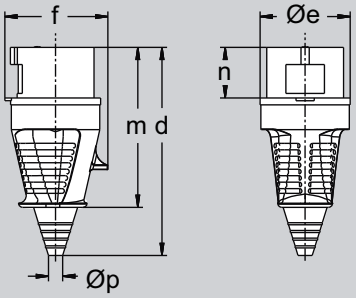

Amp.	16	63		
Poles	3	3	4	5
d	143	252	252	252
Øe	51	81	81	81
f	60	97	97	97
m	108	192	192	192
n	37	67	67	67
Øp	7/13	15/33	15/33	15/33

Plugs, screw terminal connection,
with flexible cable entry,
IP 44 ⚠

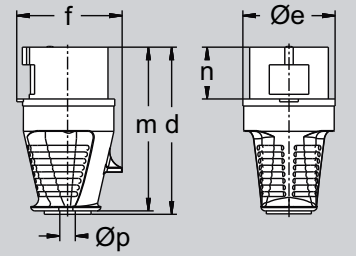

Amp.	16
Poles	3
d	111
Øe	51
f	60
m	108
n	37
Øp	8/15

Plugs, screw terminal connection,
with inverted cable entry,
IP 44 ⚠

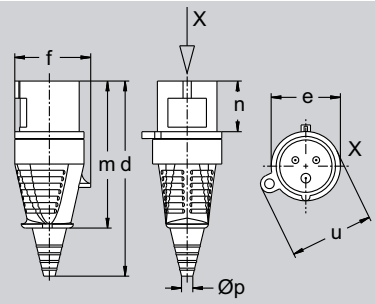

Amp.	16
Poles	3
d	143
e	51
f	60
m	108
n	37
Øp	7/13
u	61

Plugs, screw terminal connection,
with flexible cable entry,
with eye for padlock, for locking with panel socket 512 306, 512 304 and 512 309,
IP 44 ⚠

PDF processed with CutePDF evaluation edition www.CutePDF.com

Ampère	Poles	110 V 50 and 60 Hz 3-pole 4 h	110 V 50 and 60 Hz 4-pole 4 h	110 V 50 and 60 Hz 5-pole 4 h	230 V 50 and 60 Hz 3-pole 6 h	230 V 50 and 60 Hz 4-pole 9 h	230 V 50 and 60 Hz 5-pole 9 h	400 V 50 and 60 Hz 3-pole 9 h	400 V 50 and 60 Hz 4-pole 6 h	400 V 50 and 60 Hz 5-pole 6 h	500 V 50 and 60 Hz 3-pole 7 h	500 V 50 and 60 Hz 4-pole 7 h	500 V 50 and 60 Hz 5-pole 7 h	> 50 - 500 V 100 - 300 Hz 3-pole 10 h	> 50 - 500 V 100 - 300 Hz 4-pole 10 h	> 50 - 500 V 100 - 300 Hz 5-pole 10 h	> 50 - 500 V over 300 - 500 Hz 3-pole 2 h	> 50 - 500 V over 300 - 500 Hz 4-pole 2 h	> 50 - 500 V over 300 - 500 Hz 5-pole 2 h	
																				2P+E 3P+E 3P+N+E
		Part numbers																		
16	4	210 404 SL			210 409 SL			**210 406 SL**			210 407 SL			210 410 SL			210 402 SL			10/60
16	5	210 504 SL			210 509 SL			**210 SL**												10/60
32	3	230 304 SL			**230 306 SL**			230 309 SL												10/60
32	4	230 404 SL			230 409 SL			**230 406 SL**			230 407 SL			230 410 SL			230 402 SL			10/60
32	5	230 504 SL			230 509 SL			**230 SL**												10/60
16	4	210 404			210 409			**210 406**			210 407			210 410			210 402			10
16	5	210 504			210 509			**210**												10/60
32	3	230 304			**230 306**			230 309												10
32	4	230 404			230 409			**230 406**			230 407			230 410			230 402			10
32	5	230 504			230 509			**230**												10/60
63	3	262 304			**262 306**			262 309												5
63	4	262 404			262 409			**262 406**			262 407			262 410			262 402			5
63	5	262 504			262 509			**262**												5
63	5							**262 Ni**												5
16	3	210 304			**210 306**			210 309												10
16	5							**210 Ni**												10
32	5							**230 Ni**												10
63	3	260 304			**260 306**			260 309												5
63	4	260 404			260 409			**260 406**			260 407			260 410			260 402			5
63	5	260 504			260 509			**260**												5
63	5							**260 Ni**												5
16	3	215 304			**215 306**			215 309												10
16	3	212 304			**212 306**			212 309												10



Plugs: screwless / with screw terminals

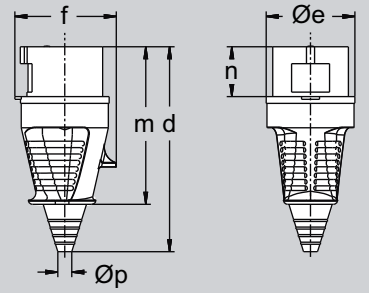

Amp.	16	32
Poles	5	5
d	153	181
Øe	65	72
f	75	88
m	117	138
n	37	46
Øp	8/21	11/24

Phase inverters,
screw terminal connection,
with flexible cable entry,
IP 44 ⚠

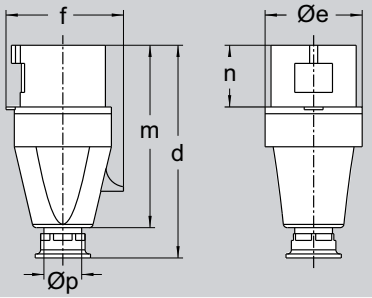

Amp.	16	32
Poles	5	5
d	131	155
Øe	65	73
f	75	88
m	112	133
n	37	46
Øp	7,5 - 14,5	10 - 19,5

Phase inverters,
screw terminal connection,
with trumpet gland,
IP 44 ⚠

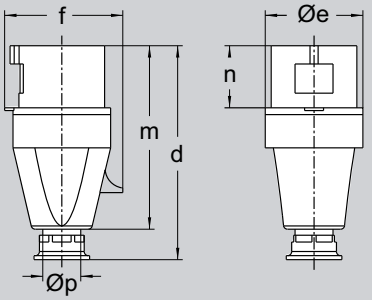

Amp.	16			32			63		
Poles	3	4	5	3	4	5	3	4	5
d	123	131	131	155	155	155	240	240	240
Øe	51	65	65	73	73	73	81	81	81
f	60	68	75	79	79	88	97	97	97
m	118	112	112	133	133	133	192	192	192
n	37	37	37	46	46	46	67	67	67
Øp	7,5-14,5	7,5-14,5	7,5-14,5	10-19,5	10-19,5	10-19,5	18-34,5	18-34,5	18-34,5

Plugs, screw terminal connection,
with trumpet gland,
IP 44 ⚠

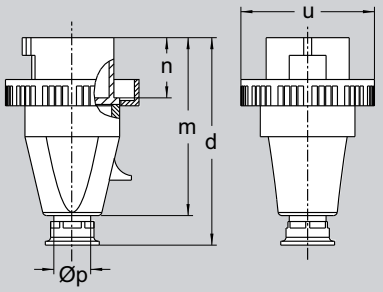

Amp.	16
Poles	3
d	126
m	110
n	37
u	72
Øp	7,5-14,5

Plugs, screw terminal connection,
with trumpet gland, IP 67 💧💧

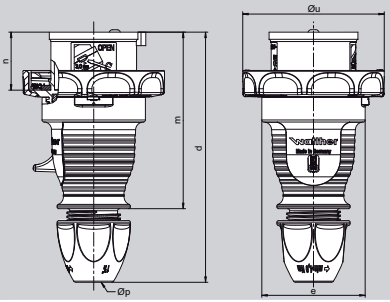

Amp.	16	16	32	32
Poles	4	5	3 / 4	5
d	150-161	150-161	174-183	174-183
Ø e	Ø 65	Ø 65	Ø 72	Ø 72
m	111	111	127	127
n	36,5	36,5	45,5	45,5
Ø u	Ø 81	Ø 89	Ø 95	Ø 100
Ø p	7,5-18,5	7,5-18,5	10-22,5	10-22,5

Plugs, screw terminal connection,
with cable gland, IP 67 💧💧

or

Plugs, screwless (SL) with
insulation displacement connection,
with cable gland, IP 67 💧💧

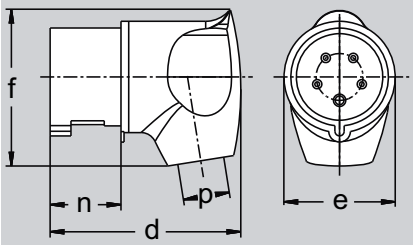

Amp.	16			32		
Poles	3	4	5	3	4	5
d	85	98	98	115	115	115
e	50,3	64,3	64,3	72	72	72
f	70	86	86	96	96	100
n	37	37	37	45,8	45,8	45,8
p	8/15	10/16,5	10/16,5	11/22	11/22	11/22

mondo angled plug,
screw terminal connection,
back shell RAL 7035 light grey,
IP 44 ⚠

Ampère	Poles	110 V 50 and 60 Hz			230 V 50 and 60 Hz			400 V 50 and 60 Hz			500 V 50 and 60 Hz			> 50 - 500 V 100 - 300 Hz			> 50 - 500 V over 300 - 500 Hz			
		3-pole 4 h	4-pole 4 h	5-pole 4 h	3-pole 6 h	4-pole 9 h	5-pole 9 h	3-pole 9 h	4-pole 6 h	5-pole 6 h	3-pole 7 h	4-pole 7 h	5-pole 7 h	3-pole 10 h	4-pole 10 h	5-pole 10 h	3-pole 2 h	4-pole 2 h	5-pole 2 h	
		Part numbers																		
16	5							**210 PH**												10
16	5							**210 PH Ni**												10
32	5							**230 PH**												10
32	5							**230 PH Ni**												10



230 PH

16	5							**211 PH**												10
16	5							**211 PH Ni**												10
32	5							**231 PH**												10
32	5							**231 PH Ni**												10



231 PH

16	3	211 304		**211 306**	211 309															10
16	4	211 404		211 409	**211 406**			211 407			211 410			211 402						10
16	5	211 504		211 509	**211**															10
16	5				**211 Ni**															10
32	3	231 304		**231 306**	231 309															10
32	4	231 404		231 409	**231 406**			231 407			231 410			231 402						10
32	5	231 504		231 509	**231**															10
32	5				**231 Ni**															10
63	3	261 304		**261 306**	261 309															5
63	4	261 404		261 409	**261 406**			261 407			261 410			261 402						5
63	5	261 504		261 509	**261**															5
63	5				**261 Ni**															5


231

16	3	219 304		**219 306**	219 309															10
16	5				**219** Ni															10
32	5				**239** Ni															10


219306

16	4	219 404		219 409	**219 406**			219 407			219 410			219 402						10
16	5	219 504		219 509	**219**															10
32	3	239 304		**239 306**	239 309															10
32	4	239 404		239 409	**239 406**			239 407			239 410			239 402						10
32	5	239 504		239 509	**239**															10

The plugs listed here are also available as **screwless version** with insulation displacement connection.
To order a plug as screwless version, just add "**SL**" behind the part number.


239

16	3	216 304		**216 306**	216 309															10
16	4	216 404		216 409	**216 406**			216 407			216 410			216 402						10
16	5	216 504		216 509	**216**															10/60
32	3	236 304		**236 306**	236 309															10
32	4	236 404		236 409	**236 406**			236 407			236 410			236 402						10
32	5	236 504		236 509	**236**															10

Also available in **pearl white** and **clear white**:
For pearl white add "**PW**" behind the part number, for clear white "**RW**"


236

Plugs: screwless / with screw terminals

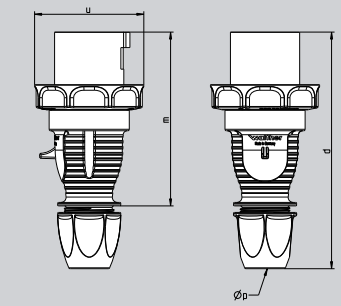

Amp.	63		
Poles	3	4	5
d	246	246	246
u	109	109	109
m	174	174	174
Øp	14-33	14-33	14-33

Plugs, screw terminal connection,
with cable gland, IP 67

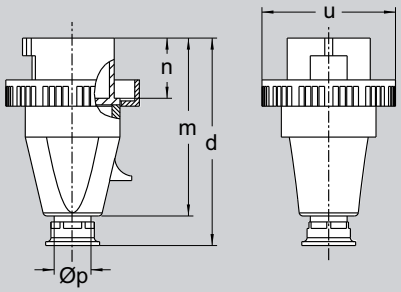

Amp.	63			125		
Poles	3	4	5	3	4	5
d	243	243	243	315	315	315
m	195	195	195	258	258	258
n	67	67	67	75,5	75,5	75,5
u	110	110	110	130	130	130
Øp	18-35	18-35	18-35	24-45	24-45	24-45

Plugs, screw terminal connection,
with trumpet gland,
IP 67

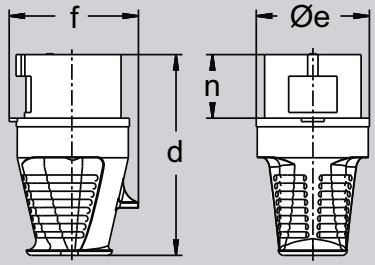

Amp.	16		32		63	
Poles	4	5	4	5	4	5
d	65	65	155	72	240	81
Øe	58	65	72	72	81	81
f	68	75	79	88	97	97
n	37	37	46	46	67	67

Phase sequence control plugs,
IP 44

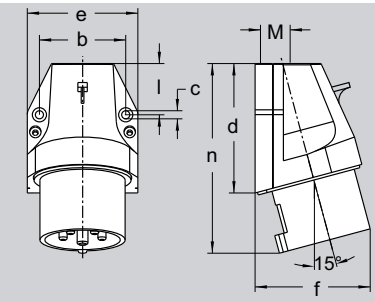

Amp.	16			32		
Poles	3	4	5	3	4	5
b	45,5	60	60	60	60	60
c	5,3	5,3	5,3	5,3	5,3	5,3
d	74	80	80	97	97	97
e	60	74	74	82	82	82
f	60	73	73	80	80	86
l	28	31	31	45	45	45
n	110	117	117	141	141	141
M	20	20	20	25	25	25

Wall mount appliance inlets,
external fixing,
1 top cable entry,
IP 44

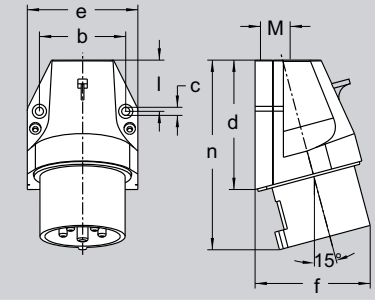

Amp.	16			32		
Poles	3	4	5	3	4	5
b	45,5	60	60	60	60	60
c	5,3	5,3	5,3	5,3	5,3	5,3
d	74	80	80	97	97	97
e	60	74	74	82	82	82
f	60	73	73	80	80	86
l	28	31	31	45	45	45
n	110	117	117	141	141	141
M	20	20	20	25	25	25

Wall mount appliance inlets,
as phase inverters
external fixing,
1 top cable entry,
IP 44

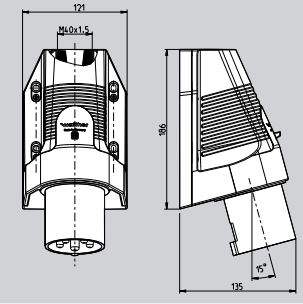

Amp.	63		
Poles	3	4	5
d	186	186	186
M	40	40	40

Wall mount appliance inlets,
external fixing,
1 top cable entry,
contacts not nickel-plated,
IP 67

Ampère	Poles	110 V 50 and 60 Hz 3-pole 4 h	110 V 50 and 60 Hz 4-pole 4 h	110 V 50 and 60 Hz 5-pole 4 h	230 V 50 and 60 Hz 3-pole 6 h	230 V 50 and 60 Hz 4-pole 9 h	230 V 50 and 60 Hz 5-pole 9 h	400 V 50 and 60 Hz 3-pole 9 h	400 V 50 and 60 Hz 4-pole 6 h	400 V 50 and 60 Hz 5-pole 6 h	500 V 50 and 60 Hz 3-pole 7 h	500 V 50 and 60 Hz 4-pole 7 h	500 V 50 and 60 Hz 5-pole 7 h	> 50 - 500 V 100 - 300 Hz 3-pole 10 h	> 50 - 500 V 100 - 300 Hz 4-pole 10 h	> 50 - 500 V 100 - 300 Hz 5-pole 10 h	> 50 - 500 V over 300 - 500 Hz 3-pole 2 h	> 50 - 500 V over 300 - 500 Hz 4-pole 2 h	> 50 - 500 V over 300 - 500 Hz 5-pole 2 h	
								Part numbers												
63	3		268 304			**268 306**			268 309											5
63	4		268 404			268 409			**268 406**		268 407			268 410			268 402			5
63	5		268 504			268 509			**268**											5
63	3		269 304			**269 306**			269 309											5
63	4		269 404			269 409			**269 406**		269 407			269 410			269 402			5
63	5		269 504			269 509			**269**											5
63	5								**269 Ni**											5
125	3		279 304			**279 306**			279 309											2
125	4		279 404			279 409			**279 406**		279 407			279 410			279 402			2
125	5		279 504			279 509			**279**											2
125	5								**279 Ni**											2
						for voltage ranges of 110 V - 690 V														
16	4								**210 406 DF**											10
16	5								**210 DF**											10
32	4								**230 406 DF**											10
32	5								**230 DF**											10
63	4								**260 406 DF**											10
63	5								**260 DF**											5
16	3		610 304			**610 306**			610 309											10
16	4		610 404			610 409			**610 406**		610 407			610 410			610 402			10
16	5		610 504			610 509			**610**											10/60
16	3								**610 Ni**											10
32	3		630 304			**630 306**			630 309											10
32	4		630 404			630 409			**630 406**		630 407			630 410			630 402			10
32	5		630 504			630 509			**630**											10
32	5		630 504			630 509			**630 Ni**											10
16	5								**610 PH**											10
16	5								**610 PH Ni**											10
16	5								**611 PH Ni**											10
32	5								**630 PH**											10
32	5								**630 PH Ni**											10
32	5								**631 PH Ni**											10
63	3		660 304			**660 306**			660 309											2
63	4		660 404			660 409			**660 406**		660 407			660 410			660 402			2
63	5		660 504			660 509			**660**											2















Availability of blue printed (or not listed) frequencies and voltages up to 690 V **on request**!

Plugs: screwless / with screw terminals

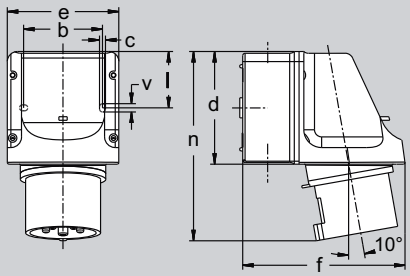

Amp.	16		32		
Poles	4	5	3	4	5
b	66,5	66,5	66,5	66,5	66,5
c	5	5	5	5	5
d	96	96	96	96	96
e	95	95	95	95	95
f	140	140	140	140	140
l	47,5	47,5	47,5	47,5	47,5
n	151	151	160	160	160
v	7	7	7	7	7
M	20/25	20/25	20/25	20/25	20/25

Wall mount appliance inlets,
internal fixing,
2 knock-out cable entries on top and bottom,
1 knock-out entry in the back wall,
IP 44 ⚠

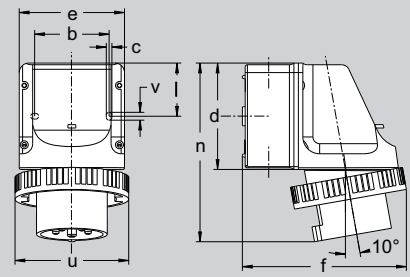

Amp.	16			32		
Poles	3	4	5	3	4	5
b	66,5	66,5	66,5	66,5	66,5	66,5
c	5	5	5	5	5	5
d	96	96	96	96	96	96
e	95	95	95	95	95	95
f	140	140	140	147	147	150
l	47,5	47,5	47,5	47,5	47,5	47,5
n	154	154	154	164	164	164
u	72	81	88	96	96	103
v	7	7	7	7	7	7
M	20/25	20/25	20/25	20/25	20/25	20/25

Wall mount appliance inlets,
internal fixing,
2 knock-out cable entries on top and bottom
1 knock-out entry in the back wall
IP 67 💧💧

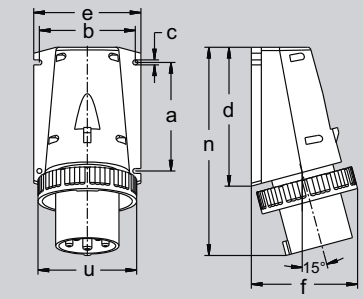

Amp.	63		
Poles	3	4	5
a	136	120	120
b	104	106	106
c	6	5,6	5,6
d	170	152	152
e	118	118	118
f	171	118	118
n	250	232	232
u	113	113	113
M	40	40	40

Wall mount appliance inlets,
external fixing,
1 top cable entry,
IP 67 💧💧

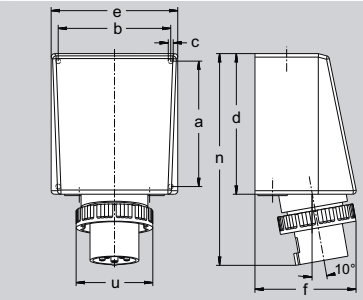

Amp.	125		
Poles	3	4	5
a	240	240	240
b	200	200	200
c	7	7	7
d	263	263	263
e	220	220	220
f	175	175	175
n	390	390	390
u	130	130	130
M1	50/20	50/20	50/20
M2	40	40	40

Wall mount appliance inlets,
internal fixing,
1 top cable entry M 50 and 1 x M 20,
2 bottom cable entries M 40,
3-pole: with terminal block set 3 x 50 mm²,
4-pole: with terminal block set 4 x 50 mm²,
5-pole: _with terminal block set 5 x 50 mm²,
IP 67 💧💧

OK = without terminal block set

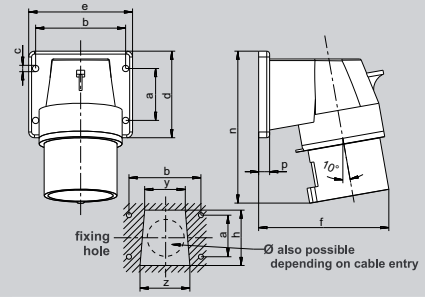

Amp.	16			32			63		
Poles	3	4	5	3	4	5	3	4	5
a	30	40	40	45	45	45	90	90	90
b	55	68	68	78	78	78	90	90	90
c	5,5	5,5	5,5	5,5	5,5	5,5	6,2	6,2	6,2
d	52	66	66	75	75	75	114	114	114
e	65	80	80	90	90	90	114	114	114
f	72	90	92	103	103	103	116	116	116
h	38	52	52	60	60	60	70	70	70
n	97	110	110	129	129	129	185	185	185
p	9,5	9,5	9,5	9,5	9,5	9,5	6	6	6
y	30	38	38	44	44	44	56	56	56
z	36	46	46	54	54	54	65	65	65

Panel mount appliance inlets,
angled, with screwed flange enclosure,
IP 44 ⚠

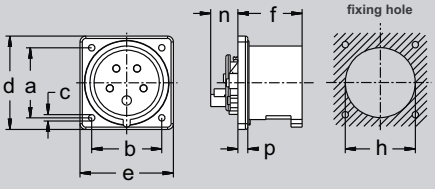

Amp.	16			32		
Poles	3	4	5	3	4	5
a	47	60	60	60	60	60
b	47	60	60	60	60	60
c	5,5	5,5	5,5	5,5	5,5	5,5
d	62	80	80	80	80	80
e	62	80	80	80	80	80
f	47	47	47	56	56	56
h	50	67	67	71	71	71
n	22	22	22	22	22	22
p	8,5	8,5	8,5	8,5	8,5	8,5

Art. 600 ... :	
Amp.	16
Poles	3
a	60
b	60
c	5,5
d	75
e	75
f	47
h	50
n	22
p	8,5

Panel mount appliance inlets,
straight, screwed flange,
IP 44 ⚠

- a retaining means has to be fitted on the device -

*) the 3 x 16 A version is alternatively available with 75 x 75 mm flange

Ampère	Poles	110 V 50 and 60 Hz 3-pole 4 h	110 V 50 and 60 Hz 4-pole 4 h	110 V 50 and 60 Hz 5-pole 4 h	230 V 50 and 60 Hz 3-pole 6 h	230 V 50 and 60 Hz 4-pole 9 h	230 V 50 and 60 Hz 5-pole 9 h	400 V 50 and 60 Hz 3-pole 9 h	400 V 50 and 60 Hz 4-pole 6 h	400 V 50 and 60 Hz 5-pole 6 h	500 V 50 and 60 Hz 3-pole 7 h	500 V 50 and 60 Hz 4-pole 7 h	500 V 50 and 60 Hz 5-pole 7 h	> 50 - 500 V 100 - 300 Hz 3-pole 10 h	> 50 - 500 V 100 - 300 Hz 4-pole 10 h	> 50 - 500 V 100 - 300 Hz 5-pole 10 h	> 50 - 500 V over 300 - 500 Hz 3-pole 2 h	> 50 - 500 V over 300 - 500 Hz 4-pole 2 h	> 50 - 500 V over 300 - 500 Hz 5-pole 2 h	
								Part numbers												
16	4	616 404			616 409			**616 406**			616 407			616 410			616 402			5
16	5	616 504			616 509			**616**												5
32	3	636 304			**636 306**			636 309												5
32	4	636 404			636 409			**636 406**			636 407			636 410			636 402			5
32	5	636 504			636 509			**636**												5
16	3	618 304			**618 306**			618 309	upper part without retaining means											5
16	4	618 404			618 409			**618 406**			618 407			618 410			618 402			5
16	5	618 504			618 509			**618**												5
32	3	638 304			**638 306**			638 309												5
32	4	638 404			638 409			**638 406**			638 407			638 410			638 402			5
32	5	638 504			638 509			**638**												5
63	3	668 304			**668 306**			668 309												2
63	4	668 404			668 409			**668 406**			668 407			668 410			668 402			2
63	5	668 504			668 509			**668**												2
125	3	678 304			**678 306**			678 309												1
125	4	678 404			678 409			**678 406**			678 407			678 410			678 402			1
125	5	678 504			678 509			**678**												1
125	3	678 304 OK			**678 306 OK**			678 309 OK												1
125	4	678 404 OK			678 409 OK			**678 406 OK**			678 407 OK			678 410 OK			678 402 OK			1
125	5	678 504 OK			678 509 OK			**678 OK**												1
16	3	611 304			**611 306**			611 309												10
16	4	611 404			611 409			**611 406**			611 407			611 410			611 402			10
16	5	611 504			611 509			**611**												10
32	3	631 304			**631 306**			631 309												10
32	4	631 404			631 409			**631 406**			631 407			631 410			631 402			10
32	5	631 504			631 509			**631**												10
63	3	661 304			**661 306**			661 309												5
63	4	661 404			661 409			**661 406**			661 407			661 410			661 402			5
63	5	661 504			661 509			**661**												5
16	3	600 304 *			**600 306 ***			600 309 *												10
16	3	615 304			**615 306**			615 309												10
16	4	615 404			615 409			**615 406**			615 407			615 410			615 402			10
16	5	615 504			615 509			**615**												10
32	3	635 304			**635 306**			635 309												10
32	4	635 404			635 409			**635 406**			635 407			635 410			635 402			10
32	5	635 504			635 509			**635**												10




636


638


668


678


631


635

Availability of blue printed (or not listed) frequencies and voltages up to 690 V **on request**!

Plugs: screwless / with screw terminals

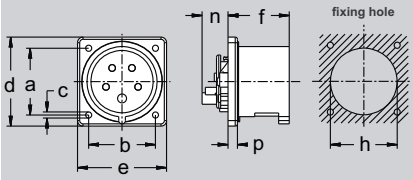

Amp.	16	32
Poles	5	5
a	60	60
b	60	60
c	5,5	5,5
d	80	80
e	80	80
f	47	56
h	67	71
n	22	22
p	8,5	8,5

Panel mount appliance inlets
as phase inverters
straight, screwed flange,
IP 44 ⚠

- a retaining means
has to be fitted on the device -

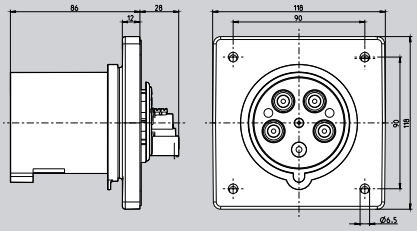

Panel mount appliance inlets
as phase inverters
straight, screwed flange,
IP 44 ⚠

- a retaining means
has to be fitted on the device -

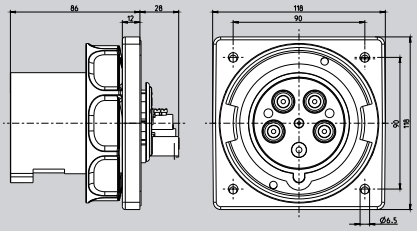

Panel mount appliance inlets
as phase inverters
straight, screwed flange,
IP 44 ⚠

- a retaining means
has to be fitted on the device -

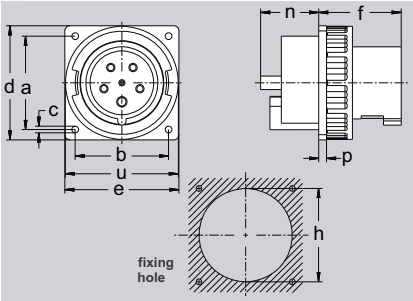

Amp.	125		
Poles	3	4	5
a	104	104	104
b	104	104	104
c	6,5	6,5	6,5
d	130	130	130
e	130	130	130
f	93	93	93
h	90	90	90
n	56	56	56
p	7,5	7,5	7,5
u	130	130	130

Panel mount appliance inlets,
straight, screwed flange,
IP 67 💧💧

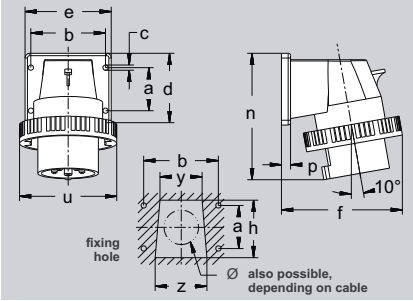

Amp.	16			32			63		
Poles	3	4	5	3	4	5	3	4	5
a	30	40	40	45	45	45	90	90	90
b	55	68	68	78	78	78	90	90	90
c	5,5	5,5	5,5	5,5	5,5	5,5	6,2	6,2	6,2
d	52	66	66	75	75	75	114	114	114
e	65	80	80	90	90	90	114	114	114
f	81	99	103	111	111	117	129	129	129
h	38	52	52	60	60	60	90	90	90
n	98	111	113	131	131	131	184	184	184
p	9,5	9,5	9,5	9,5	9,5	9,5	6	6	6
u	72	81	88	96	96	103	110	110	110
y	30	38	38	44	44	44	56	56	56
z	36	46	46	54	54	54	65	65	65

Panel mount appliance inlets,
angled, screwed flange enclosure,
IP 67 💧💧

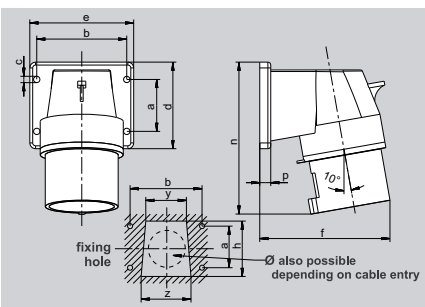

Amp.	16	32
Poles	5	5
a	40	45
b	68	78
c	5,5	5,5
d	66	75
e	80	90
f	92	103
h	52	60
n	110	129
p	9,5	9,5
y	38	44
z	46	54

Panel mount appliance inlets
as phase inverters,
angled, screwed flange enclosure,
IP 44 ⚠

Ampère	Poles	110 V 50 and 60 Hz 3-pole 4 h	110 V 50 and 60 Hz 4-pole 4 h	110 V 50 and 60 Hz 5-pole 4 h	230 V 50 and 60 Hz 3-pole 6 h	230 V 50 and 60 Hz 4-pole 9 h	230 V 50 and 60 Hz 5-pole 9 h	400 V 50 and 60 Hz 3-pole 9 h	400 V 50 and 60 Hz 4-pole 6 h	400 V 50 and 60 Hz 5-pole 6 h	500 V 50 and 60 Hz 3-pole 7 h	500 V 50 and 60 Hz 4-pole 7 h	500 V 50 and 60 Hz 5-pole 7 h	> 50 - 500 V 100 - 300 Hz 3-pole 10 h	> 50 - 500 V 100 - 300 Hz 4-pole 10 h	> 50 - 500 V 100 - 300 Hz 5-pole 10 h	> 50 - 500 V over 300 - 500 Hz 3-pole 2 h	> 50 - 500 V over 300 - 500 Hz 4-pole 2 h	> 50 - 500 V over 300 - 500 Hz 5-pole 2 h	
								Part numbers												
16	5							**615 PH**												10
32	5							**635 PH**												10
63	3			665304		665306		665309												5
63	4			665404		665409		665406			665407			665410			665402			5
63	5			665504		665509		665												5
63	3			667304		667306		667309												5
63	4			667404		667409		667406			667407			667410			667402			5
63	5			667504		667509		667												5
125	3			679 304		**679 306**		679 309												2
125	4			679 404		679 409		**679 406**			679 407			679 410			679 402			2
125	5			679 504		679 509		**679**												2
125	5							**679 Ni**												2
16	3			619 304		**619 306**		619 309												10
16	4			619 404		619 409		**619 406**			619 407			619 410			619 402			10
16	5			619 504		619 509		**619**												10
16	5							**619 Ni**												10
32	3			639 304		**639 306**		639 309												5
32	4			639 404		639 409		**639 406**			639 407			639 410			639 402			5
32	5			639 504		639 509		**639**												5
32	5							**639 Ni**												5
63	3			669 304		**669 306**		669 309												5
63	4			669 404		669 409		**669 406**			669 407			669 410			669 402			5
63	5			669 504		669 509		**669**												5
63	5							**669 Ni**												5
16	5							**611 PH**												10
32	5							**631 PH**												10




635PH


665


667


679


639



631PH