Couplers: screwless / with screw terminals

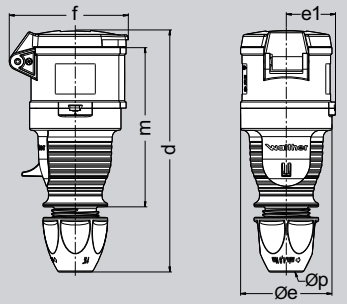

Amp.	16	16	32	32	32
Poles	4	5	3	4	5
d	165-176	165-176	189-199	189-199	189-199
Øe	65	65	72	72	72
e1	35	35	38,5	38,5	38,5
f	77	85	91	91	97
m	114	114	130	130	130
Øp	7,5 - 18,5	7,5 - 18,5	10 - 22,5	10 - 22,5	10 - 22,5

Couplers, screwless,
with insulation displacement connection,
with exterior cable gland,
IP 44 ⚠

Conductor cross sections:
16 A: 1 - 2,5 mm² / 32 A: 2,5 - 6 mm²

Cable diameters:
16 A: 7,5 - 18,5 mm / 32 A: 10 - 22,5 mm

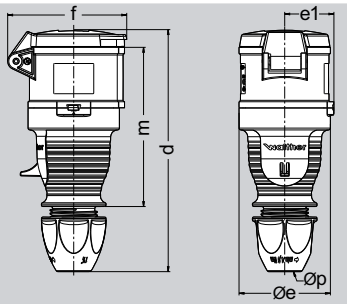

Amp.	16	16	32	32	32
Poles	4	5	3	4	5
d	165-176	165-176	189-199	189-199	189-199
Øe	65	65	72	72	72
e1	35	35	38,5	38,5	38,5
f	77	85	91	91	97
m	114	114	130	130	130
Øp	7,5 - 18,5	7,5 - 18,5	10 - 22,5	10 - 22,5	10 - 22,5

Couplers, screw terminal connection,
with exterior cable gland,
IP 44 ⚠

Conductor cross sections:
16 A: 1 - 2,5 mm² / 32 A: 2,5 - 6 mm²

Cable diameters:
16 A: 7,5 - 18,5 mm / 32 A: 10 - 22,5 mm

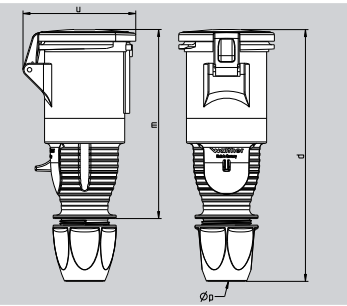

Amp.	63		
Poles	3	4	5
d	261	261	261
u	113	113	113
m	189	189	189
Øp	14-33	14-33	14-33

Couplers, screw terminal connection,
with exterior cable gland,
IP 44 ⚠

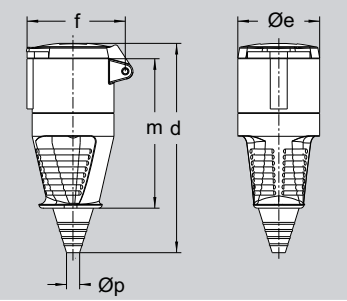

Amp.	16	63		
Poles	3	3	4	5
d	154	266	266	266
Øe	51	96	96	96
f	68	114	114	114
m	109	196	196	196
Øp	7/13	15/33	15/33	15/33

Couplers, screw terminal connection,
with flexible cable entry,
IP 44 ⚠

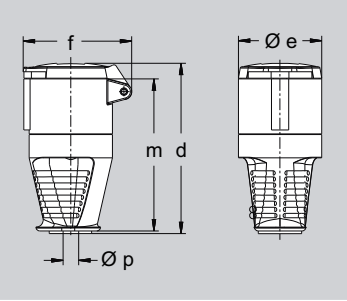

Amp.	16
Poles	3
d	121
Øe	51
f	68
m	108
Øp	8/15

Couplers, screw terminal connection,
with inverted cable entry,
IP 44 ⚠

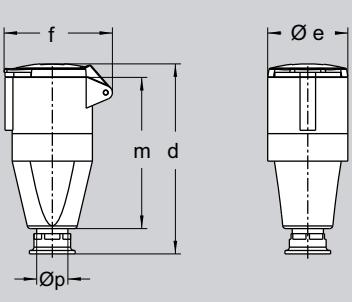

Amp.	16			32			63		
Poles	3	4	5	3	4	5	3	4	5
d	135	151	151	171	171	171	255	255	255
Øe	51	65	65	72	72	72	96	96	96
f	68	85	85	91	91	98	114	114	114
m	110	113	113	136	136	136	194	194	194
Øp	7,5-14,5	7,5-14,5	7,5-14,5	10-19,5	10-19,5	10-19,5	18-34,5	18-34,5	18-34,5

Couplers, screw terminal connection,
with trumpet gland,
IP 44 ⚠

PDF processed with CutePDF evaluation edition www.CutePDF.com

Ampère	Poles	110 V 50 and 60 Hz 3-pole 4 h	110 V 50 and 60 Hz 4-pole 4 h	110 V 50 and 60 Hz 5-pole 4 h	230 V 50 and 60 Hz 3-pole 6 h	230 V 50 and 60 Hz 4-pole 9 h	230 V 50 and 60 Hz 5-pole 9 h	400 V 50 and 60 Hz 3-pole 9 h	400 V 50 and 60 Hz 4-pole 6 h	400 V 50 and 60 Hz 5-pole 6 h	500 V 50 and 60 Hz 3-pole 7 h	500 V 50 and 60 Hz 4-pole 7 h	500 V 50 and 60 Hz 5-pole 7 h	> 50 - 500 V 100 - 300 Hz 3-pole 10 h	> 50 - 500 V 100 - 300 Hz 4-pole 10 h	> 50 - 500 V 100 - 300 Hz 5-pole 10 h	> 50 - 500 V over 300 - 500 Hz 3-pole 2 h	> 50 - 500 V over 300 - 500 Hz 4-pole 2 h	> 50 - 500 V over 300 - 500 Hz 5-pole 2 h	
																				2P+E 3P+E 3P+N+E
		Part numbers																		
16	4	310 404 SL			310 409 SL			**310 406 SL**			310 407 SL			310 410 SL			310 402 SL			10/60
16	5	310 504 SL			310 509 SL			**310SL**												10/60
32	3	330 304 SL			**330 306 SL**			330 309 SL												10/60
32	4	330 404 SL			330 409 SL			**330 406 SL**			330 407 SL			330 410 SL			330 402 SL			10/60
32	5	330 504 SL			330 509 SL			**330 SL**												10/60
																				 330SL
16	4	310 404			310 409			**310 406**			310 407			310 410			310 402			10
16	5	310 504			310 509			**310**												10/60
32	3	330 304			**330 306**			330 309												10
32	4	330 404			330 409			**330 406**			330 407			330 410			330 402			10
32	5	330 504			330 509			**330**												10/60
																				 330
63	3	362 304			**362 306**			362 309												5
63	4	362 404			362 409			**362 406**			362 407			362 410			362 402			5
63	5	362 504			362 509			**362**												5
63	5							**362 Ni**												5
																				 362
16	3	310 304			**310 306**			310 309												10/60
63	3	360 304			**360 306**			360 309												5
63	4	360 404			360 409			**360 406**			360 407			360 410			360 402			5
63	5	360 504			360 509			**360**												5
63	5							**360 Ni**												5
																				 360
16	3	315 304			**315 306**			315 309												10
																				 315 306
16	3	311 304			**311 306**			311 309												10
16	4	311 404			311 409			**311 406**			311 407			311 410			311 402			10
16	5	311 504			311 509			**311**												10
16	5							**311 Ni**												10
32	3	331 304			**331 306**			331 309												10
32	4	331 404			331 409			**331 406**			331 407			331 410			331 402			10
32	5	331 504			331 509			**331**												10
32	5							**331 Ni**												10
63	3	361 304			**361 306**			361 309												5
63	4	361 404			361 409			**361 406**			361 407			361 410			361 402			5
63	5	361 504			361 509			**361**												5
63	5							**361 Ni**												5
																				 331

The here listed 63 A couplers are also available with **pilot contact**.
To order them, simply add a "**P**" behind the standard part number.
Availability of blue printed (or not listed) frequencies and voltages up to 690 V **on request**!

Couplers: screwless / with screw terminals

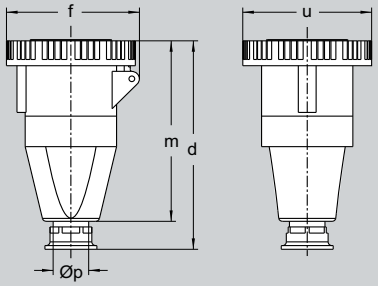

Amp.	16	63			125		
Poles	3	3	4	5	3	4	5
d	136	255	255	255	332	332	332
f	78	117	117	117	130	130	130
m	121	206	206	206	275	275	275
u	72	110	110	110	130	130	130
Øp	7,5 - 14,5	18 - 34,5	18 - 34,5	18 - 34,5	24 - 45	24 - 45	24 - 45

Couplers, screw terminal connection,
with trumpet gland,
125 A couplers with Multi-Contact
IP 67

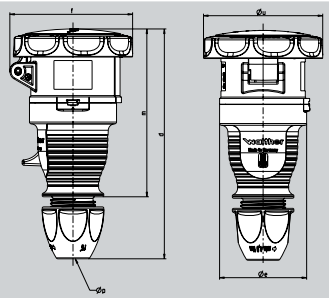

Amp.	16	16	32	32
Poles	4	5	3 / 4	5
d	150-161	150-161	174-183	174-183
Ø e	Ø 65	Ø 65	Ø 72	Ø 72
f	85	92	95	104
m	125	125	142	142
Ø u	Ø 81	Ø 89	Ø 95	Ø 100
Ø p	7,5 - 18,5	7,5 - 18,5	10 - 22,5	10 - 22,5

Couplers, screw terminal connection,
with exterior cable gland,
IP 67

or

Couplers, screwless („SL“),
with insulation displacement connection,
with exterior cable gland,
IP 67

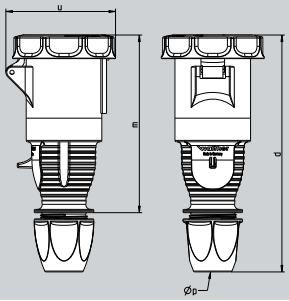

Amp.	63		
Poles	3	4	5
d	261	261	261
u	116	116	116
m	189	189	189
Øp	14-33	14-33	14-33

Couplers, screw terminal connection,
with exterior cable gland,
IP 67

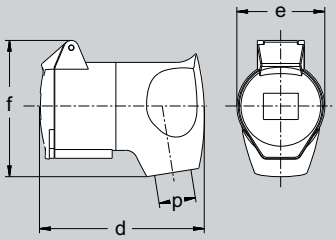

Amp.	16
Poles	3
d	95
e	50,3
f	80
p	8/13

Angled couplers,
screw terminal connection,
IP 44



A **holding plate** allows you to suspend a **plug/coupler with exterior cable gland** from the ceiling.

314 500 = holding plate for **16 A** plug/coupler

334 500 = holding plate for **32 A** plug/coupler



Ampère	Poles	110 V 50 and 60 Hz 3-pole 4 h	110 V 50 and 60 Hz 4-pole 4 h	110 V 50 and 60 Hz 5-pole 4 h	230 V 50 and 60 Hz 3-pole 6 h	230 V 50 and 60 Hz 4-pole 9 h	230 V 50 and 60 Hz 5-pole 9 h	400 V 50 and 60 Hz 3-pole 9 h	400 V 50 and 60 Hz 4-pole 6 h	400 V 50 and 60 Hz 5-pole 6 h	500 V 50 and 60 Hz 3-pole 7 h	500 V 50 and 60 Hz 4-pole 7 h	500 V 50 and 60 Hz 5-pole 7 h	> 50 - 500 V 100 - 300 Hz 3-pole 10 h	> 50 - 500 V 100 - 300 Hz 4-pole 10 h	> 50 - 500 V 100 - 300 Hz 5-pole 10 h	> 50 - 500 V over 300 - 500 Hz 3-pole 2 h	> 50 - 500 V over 300 - 500 Hz 4-pole 2 h	> 50 - 500 V over 300 - 500 Hz 5-pole 2 h	
								Part numbers												
16	3			319 304		**319 306**			319 309											10
16	5								**319 Ni**											10
32	5								**339 Ni**											10
63	3			369 304		**369 306**			369 309											5
63	4			369 404		369 409			**369 406**		369 407			369 410			369 402			5
63	5			369 504		369 509			**369**											5
63	5								**369 Ni**											5
125	3			379 304		**379 306**			379 309											2
125	4			379 404		379 409			**379 406**		379 407			379 410			379 402			2
125	5			379 504		379 509			**379**											2
125	5								**379 Ni**											2



16	4	319 404	319 409	**319 406**	319 407	319 410	319 402	10
16	5	319 504	319 509	**319**				10
32	3	339 304	**339 306**	339 309				10
32	4	339 404	339 409	**339 406**	339 407	339 410	339 402	10
32	5	339 504	339 509	**339**				10



Couplers with new design and cable gland. Additionally available as **screwless version** with insulation displacement connection. To order a coupler as screwless version, just add "**SL**" behind the part number.

63	3	368 304	**368 306**	368 309	368 407	368 410	368 402	10
63	4	368 404	368 409	**368 406**				10
63	5	368 504	368 509	**368**				10



16	3	316 304	**316 306**	316 309				10





Padlock
for locking IP 67 plugs and couplers

16 A, 4 and 5 pole and
32 A, 3, 4 and 5 pole

Part no. 501 1



The here listed 63 A + 125 A couplers are also available with **pilot contact**.
To order them, simply add a "**P**" behind the standard part number.
Availability of blue printed (or not listed) frequencies and voltages up to 690 V **on request**!